STB–50U Dimensions Drawing

Note: All dimensions unit are in inches
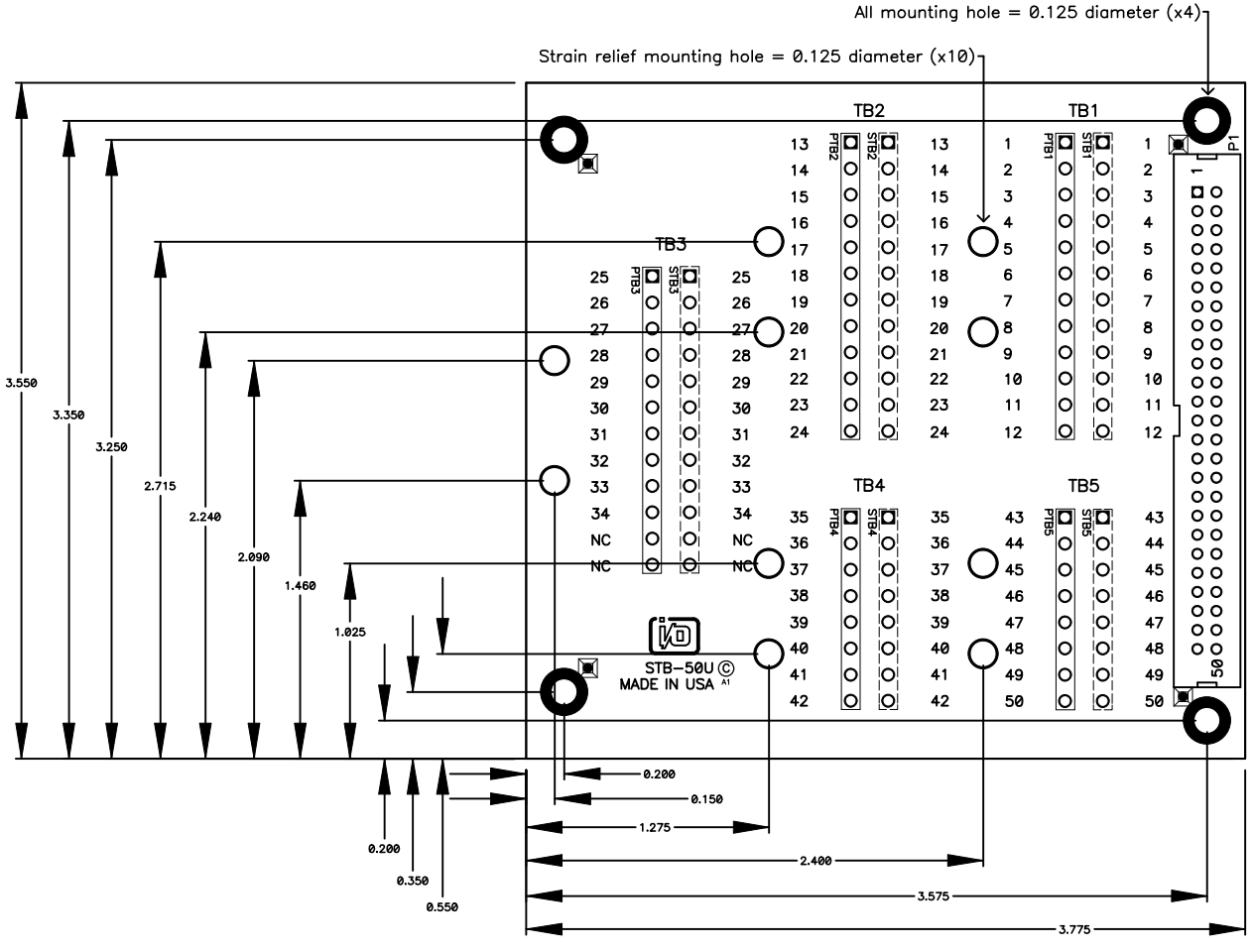
Image drawn to scale